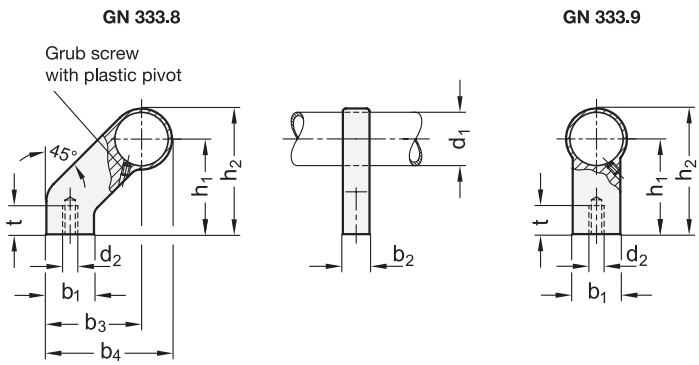

2 Type

A Mounting from the back (threaded blind bore)

1

d_1	d_2	b_1	b_2	b_3	b_4	h_1	h_2	t min.
28	M 8	25	14	50	66	50	66	15

Specification

3

- Zinc die casting
  Powder coated
  Black, RAL 9005, textured finish ● **SW**
  Silver, RAL 9006, textured finish ● **SR**
- Grub screw with plastic pivot
  GN 913.3-M4-6-KU
- RoHS

Information

Handle legs GN 333.8 / GN 333.9 can be used for longer tubes or higher loads of tubular handles.

They can be used for tube Ø 28 of the tubular handles GN 333, GN 333.1, GN 333.2 and GN 333.3.

see also...
- *Tubular Handles GN 333 (Angled) → Page 186*
- *Tubular Handles GN 333.1 (Straight) → Page 180*
- *Tubular Handles GN 333.2 (Angled, with Movable Handle Legs) → Page 189*

How to order (Angled version)		
1 2 3	1	d_1
GN 333.8-28-A-SW	2	Type
	3	Finish

How to order (Straight version)		
1 2 3	1	d_1
GN 333.9-28-A-SR	2	Type
	3	Finish