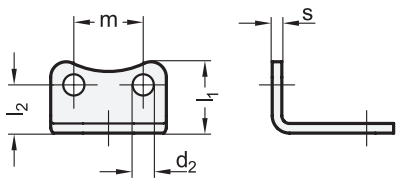

Top views for various bore-Ø d_1

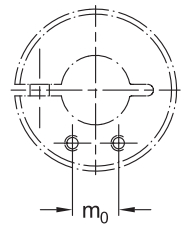

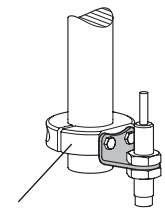

Shaft collar
GN 7062.1 / GN 7072.1

Rost frei — Inox Stainless Steel

3 Type

L Angled

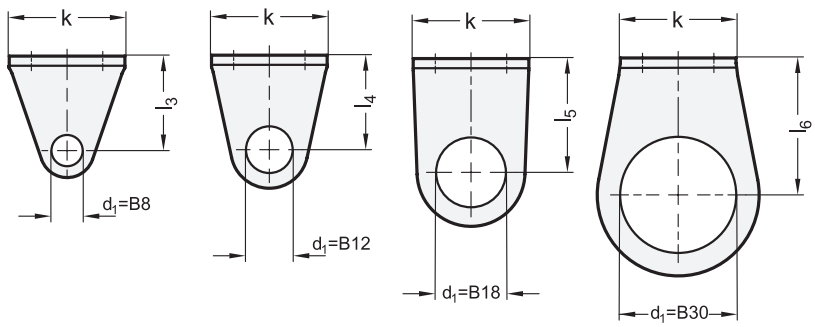

	1				2									
m_0	d_1 +0,1				k	d_2	l_1	l_2	l_3	l_4	l_5	l_6	m	s
8	B 8	B 12	-	-	14	3,5	13	9,5	15	19	-	-	8	2
10	B 8	B 12	B 18	-	18	4,5	14,5	10,5	19	24,5	29,5	-	10	2
12	B 8	B 12	B 18	B 30	23	4,5	17	12,5	19	24,5	29,5	35,5	12	2,5
18	B 8	B 12	B 18	B 30	30	5,5	18,5	12,5	24,5	24,5	29,5	35,5	18	2,5

Specification

- Stainless steel AISI 304
  Matte shot-blasted
- *Stainless Steel Characteristics* → *Page 2166*
- RoHS

Information

The sensor holders GN 7062.10 are designed for holding sensors attached with two lock nuts.

The holes d_2 match the extension-tapped holes of the shaft collars GN 7062.1 / GN 7072.1 in measurement and facilitate axial or radial positioning of sensors.

see also...

- *Semi-Split Shaft Collars GN 7062.1*
  (Stainless Steel, with Extension-Tapped Holes) → *Page 1149*
- *Split Shaft Collars GN 7072.1*
  (Stainless Steel, with Extension-Tapped Holes) → *Page 1155*

How to order

GN 7062.10-B18-30-L (1 = d_1, 2 = k, 3 = Type)